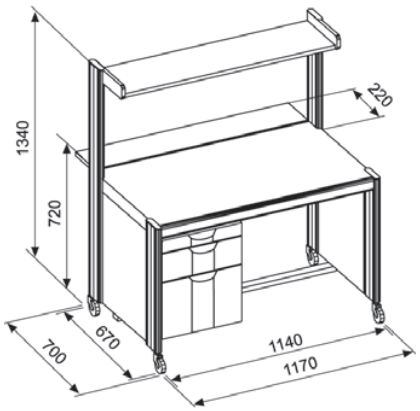

DAC00342

Mobile PC workstation with 4 legs

Model
- With lockable office pedestal, left or right
- Drawer height 1 x 150 mm, 1 x 300 mm with suspension frame
- With utility extension
- Removable desk extension, 200 mm
- Second working level, load rating 300 N, static surface load
- With foot frame
- With 2x fixed and 2x swivel castors

Knürr Dacobas® Mobile PC Workstation

	W	H	D	CRS	ESD	Pedestal	Order no.	UP
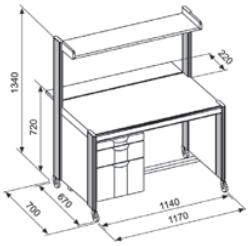 DAC00342	1140	720/1340	670			left	**01.317.040.1**	1 unit
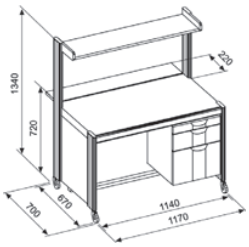 DAC20078	1140	720/1340	670			right	**01.317.041.1**	1 unit

Dimensions in mm: W= Width
H = Height
D = Depth
h = Installation height
d = Useful depth
L = Length

HU = Standard height unit, 1 HU = 44.45 mm
19"= 482.6 mm, (ideal for 19" components in acc. with DIN 41494)
UP = Unit of packaging

Conversion: 1 inch = 25,4 mm

Replace „x" with the number of your color choice